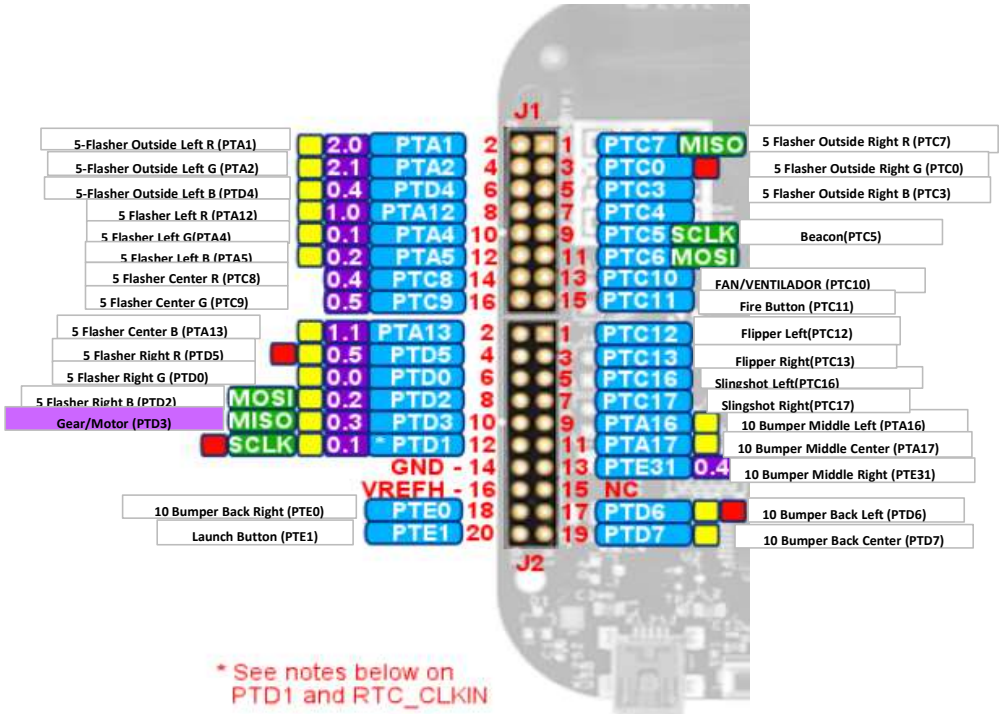
J1
5-Flasher Outside Left R (PTA1)
5-Flasher Outside Left G (PTA2)
5-Flasher Outside Left B (PTD4)
5 Flasher Left R (PTA12)
5 Flasher Left G(PTA4)
5 Flasher Left B (PTA5)
5 Flasher Center R (PTC8)
5 Flasher Center G (PTC9)
5 Flasher Center B (PTA13)
5 Flasher Right R (PTD5)
5 Flasher Right G (PTD0)
5 Flasher Right B (PTD2)
Gear/Motor (PTD3)
10 Bumper Back Right (PTE0)
Launch Button (PTE1)
2.0 PTA1 2
2.1 PTA2 4
0.4 PTD4 6
1.0 PTA12 8
0.1 PTA4 10
0.2 PTA5 12
0.4 PTC8 14
0.5 PTC9 16
1.1 PTA13 2
0.5 PTD5 4
0.0 PTD0 6
MOSI 0.2 PTD2 8
MISO 0.3 PTD3 10
SCLK 0.1 * PTD1 12
GND - 14
VREFH - 16
PTE0 18
PTE1 20
1 PTC7 MISO
3 PTC0
5 PTC3
7 PTC4
9 PTC5 SCLK
11 PTC6 MOSI
13 PTC10
15 PTC11
1 PTC12
3 PTC13
5 PTC16
7 PTC17
9 PTA16
11 PTA17
13 PTE31 0.4
15 NC
17 PTD6
19 PTD7
J2
5 Flasher Outside Right R (PTC7)
5 Flasher Outside Right G (PTC0)
5 Flasher Outside Right B (PTC3)
Beacon(PTC5)
FAN/VENTILADOR (PTC10)
Fire Button (PTC11)
Flipper Left(PTC12)
Flipper Right(PTC13)
Slingshot Left(PTC16)
Slingshot Right(PTC17)
10 Bumper Middle Left (PTA16)
10 Bumper Middle Center (PTA17)
10 Bumper Middle Right (PTE31)
10 Bumper Back Left (PTD6)
10 Bumper Back Center (PTD7)
* See notes below on
PTD1 and RTC_CLKIN

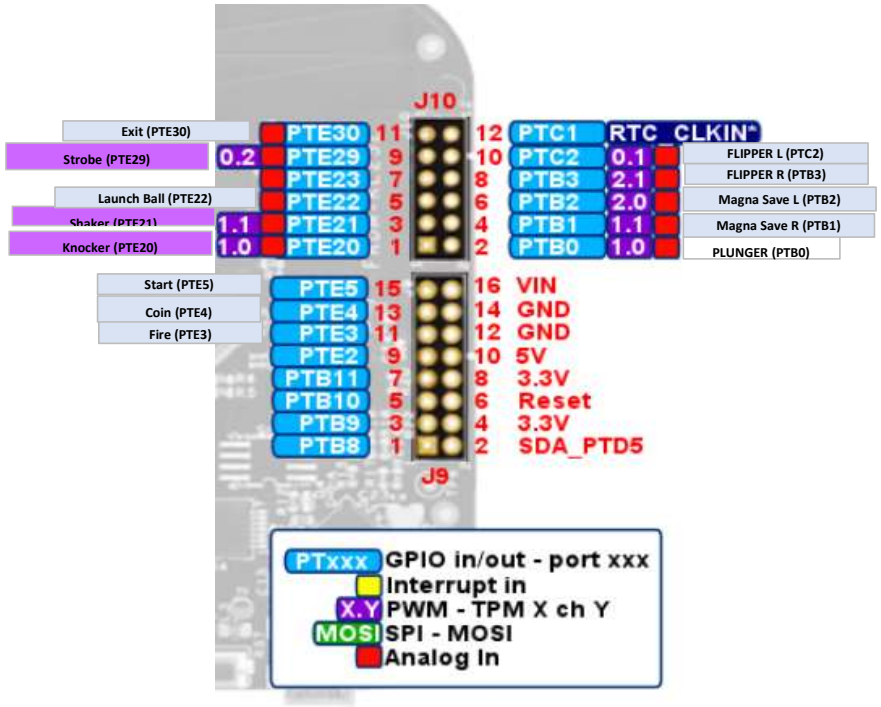
J10
Exit (PTE30)
Strobe (PTE29)
Launch Ball (PTE22)
Shaker (PTE21)
Knocker (PTE20)
0.2 PTE30 11
PTE29 9
PTE23 7
PTE22 5
1.1 PTE21 3
1.0 PTE20 1
12 PTC1 RTC_CLKIN*
10 PTC2 0.1
8 PTB3 2.1
6 PTB2 2.0
4 PTB1 1.1
2 PTB0 1.0
FLIPPER L (PTC2)
FLIPPER R (PTB3)
Magna Save L (PTB2)
Magna Save R (PTB1)
PLUNGER (PTB0)
Start (PTE5)
Coin (PTE4)
Fire (PTE3)
PTE5 15
PTE4 13
PTE3 11
PTE2 9
PTB11 7
PTB10 5
PTB9 3
PTB8 1
16 VIN
14 GND
12 GND
10 5V
8 3.3V
6 Reset
4 3.3V
2 SDA_PTD5
J9
PTxxx GPIO in/out - port xxx
Interrupt in
X.Y PWM - TPM X ch Y
MOSI SPI - MOSI
Analog In